SUNSHIELD
UNIQUE LOUVER SYSTEMS

96E scale 1:5

Rackarm 35 mm

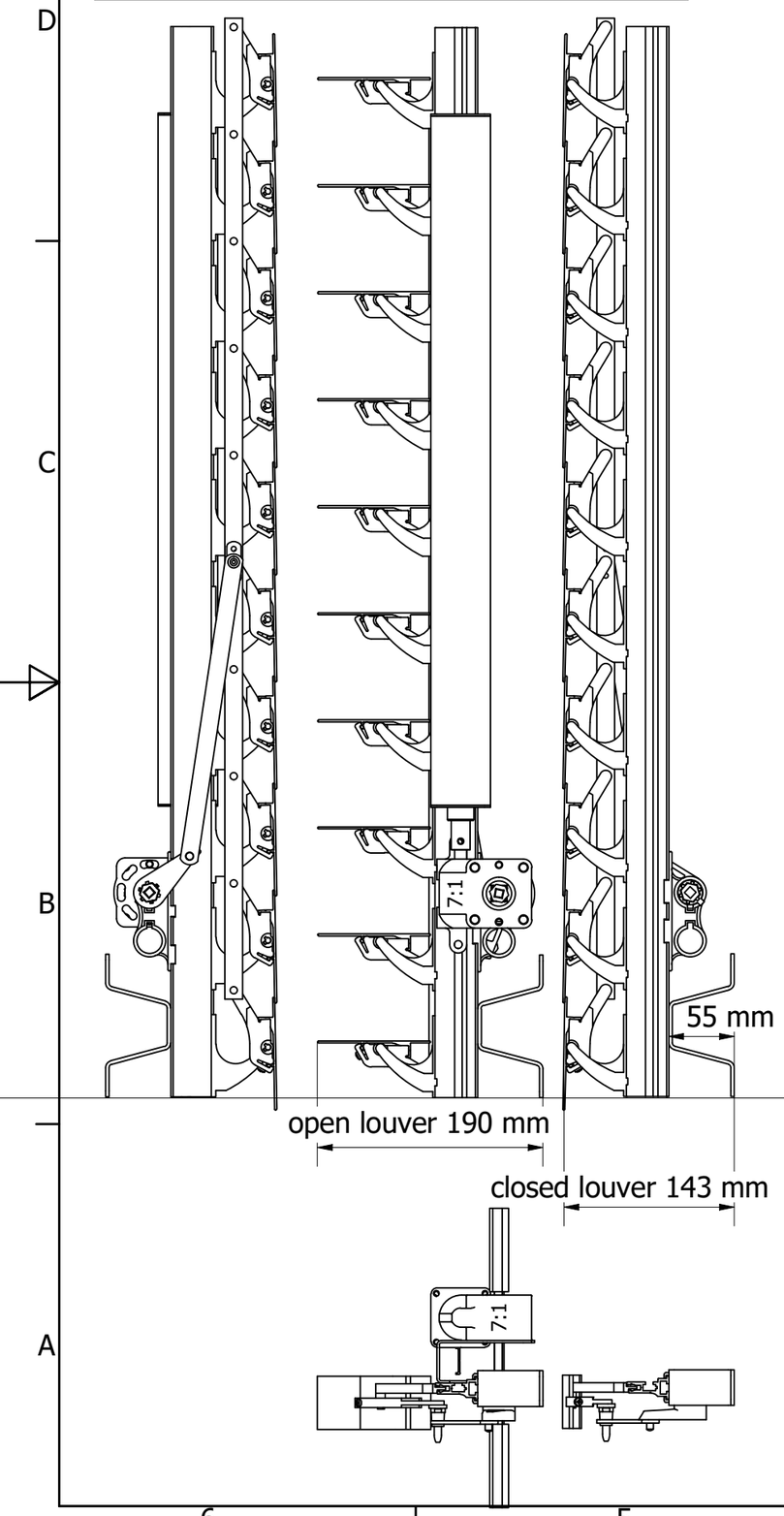

Rackarm 80 mm

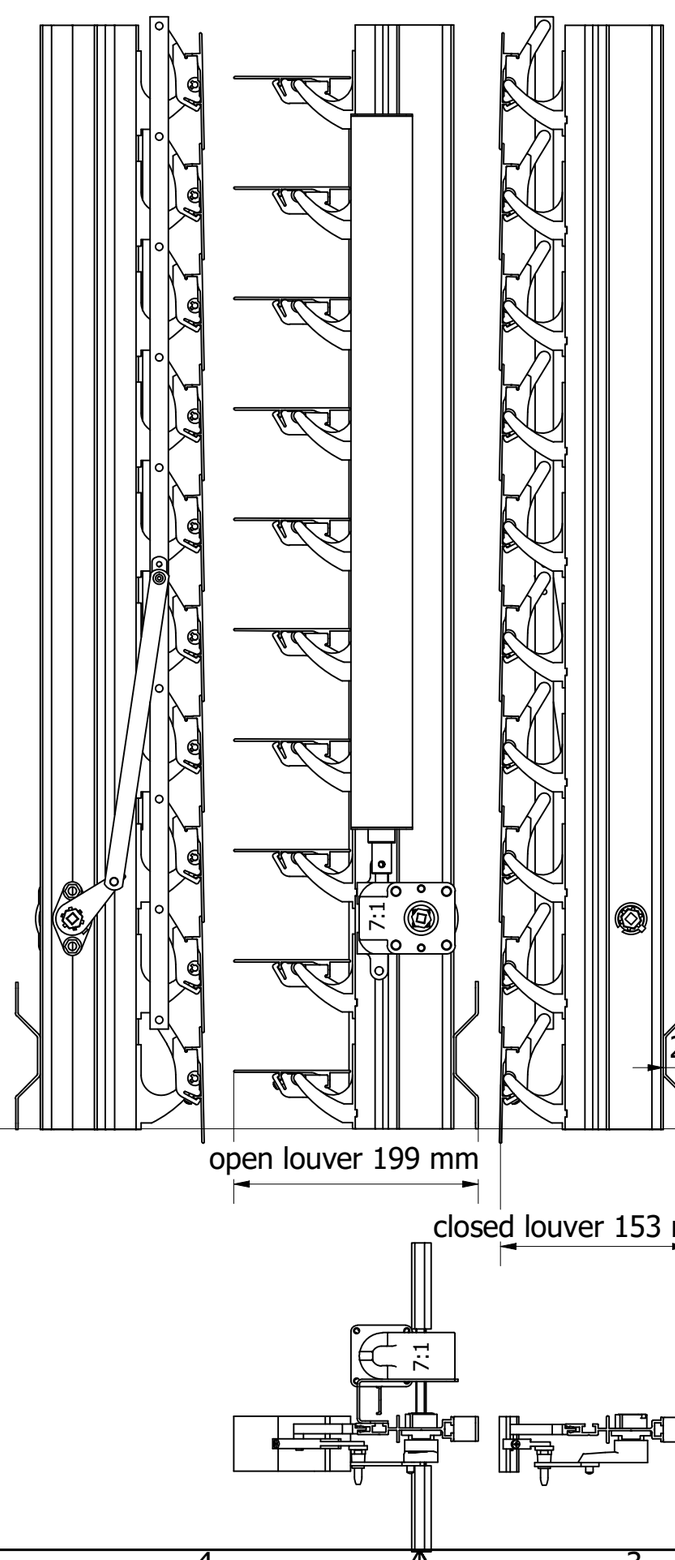
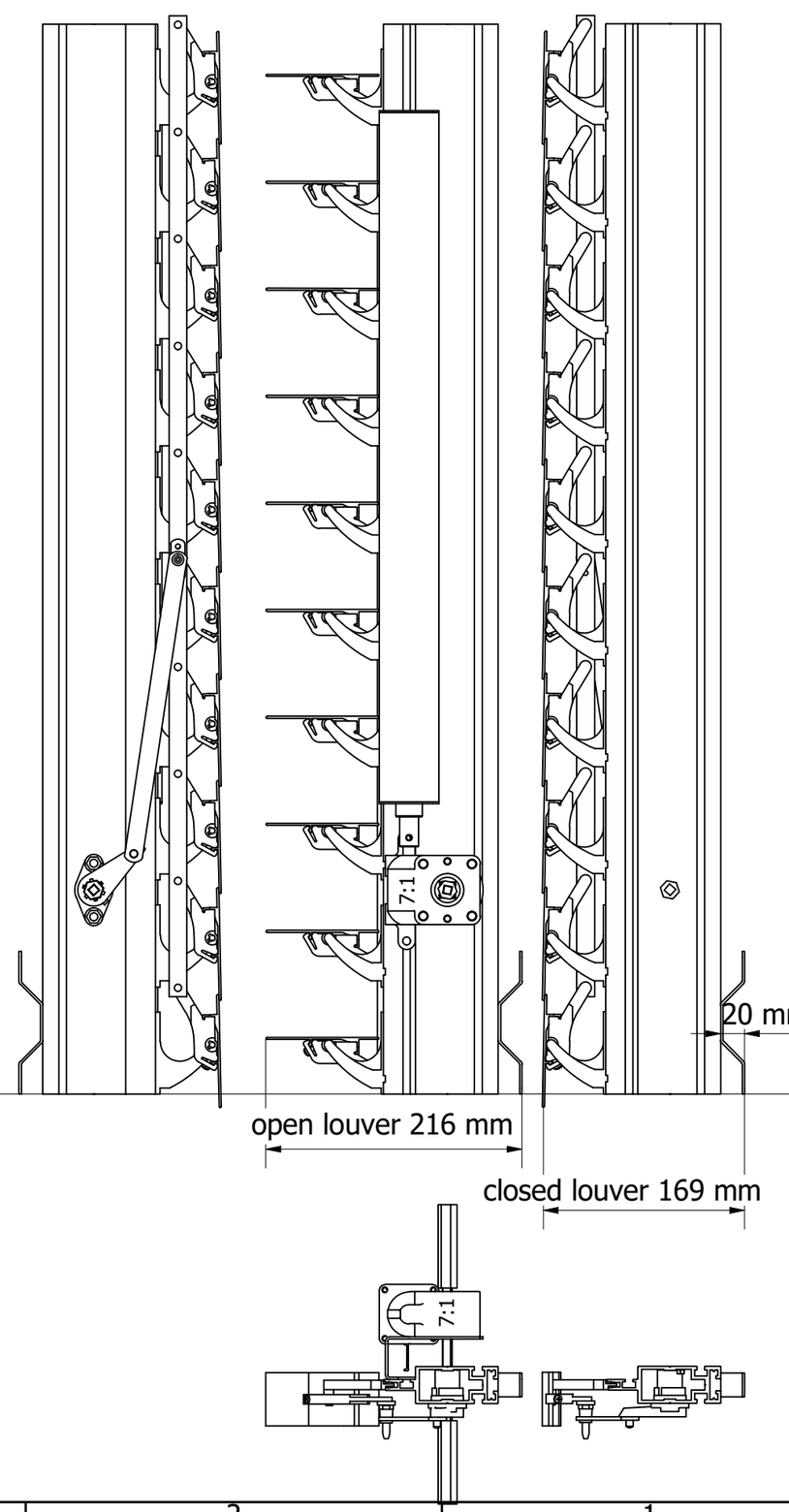
Rackarm 98 mm